JET dome rooflight fall-through protection type JET LK-DDS ROUND

VELUX® Commercial

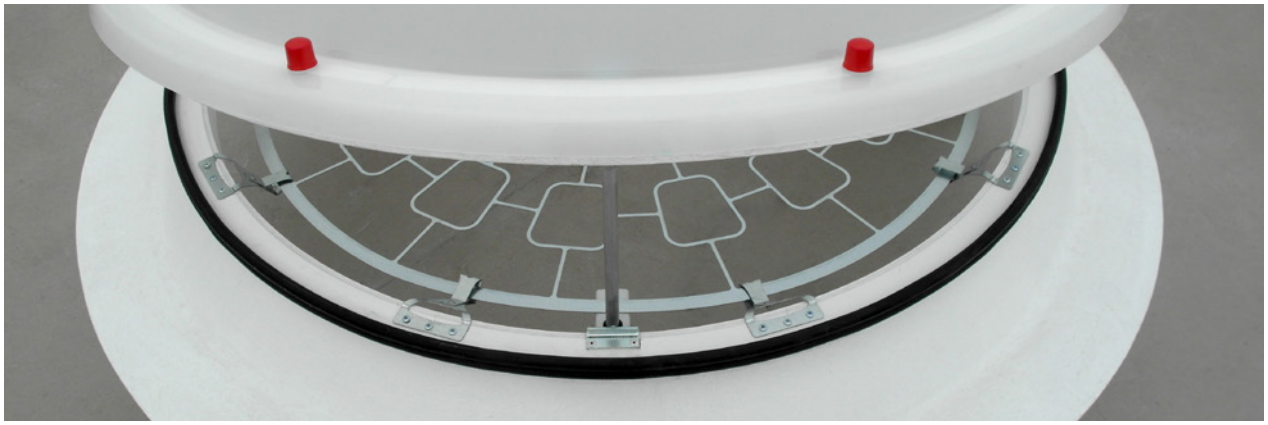

Innovative. Flexible. Reliable:
The retrofittable manufacturer-neutral fall-through protection for improved safety
The individual concept including unique substrate assessment

JET LK-DDS ROUND

- permanent and effective 'Dynamic fall-through protection' for round roof openings (e.g. with dome rooflights up to a maximum nominal width of 2.7 m)
- JET fall-through protection, tested and approved in accordance with GS-BAU-18:2015-02 with DGUV Test Certificate
- energy consuming design to reduce the impact energy (protecting people and structures) and improve appearance
- unique connection technology for stability testing of the upstand

Advantages

- individual use in existing structures (retrofitting)
- retrofitting possible regardless of upstand type and manufacturer[1]
- extensive testing
- fast and simple installation
- no interruptions to operation
- permanent and collective securing of the roof surface
- minimal influence on daylight yield and smoke exhaust
- excellent light transmission
- JET LK-DDS ROUND – assembly by specially trained fitters

Note:
[1] as long as there are no structural limitations regarding function and suitability of use

Challenge

- no or insufficient implementation in regards to valid standards and regulations (e.g. the construction site ordinance, DIN 4426:2017-01, ASR A2.1, DGUV Regulation 38 and DGUV Information 201-054)
- safety components are missing, cannot be used safely or require a complex rescue concept in addition
- building stock has been growing continuously and contains for example, different dome rooflights SHEV systems

Risk

- latent, partially high potential danger during maintenance, repair and other works on the flat roof
- substantial liability risk for the operator because of missing traffic safety

Our approach

- use of the JET LK-DDS ROUND system for protecting against fall-through

Our safety concept

- fall-through protection grids for permanent and collective safety
- customisable to suit structural conditions
- direct securing via special console
- fast, secure installation from the roof (minimal restrictions on the normal operation)
- optional monitoring of fitness for use (e.g. visual check with regard to damage or corrosion or testing the substrate)

The retrofittable fall-through securing system JET LK-DDS ROUND

- a specially designed fall-through protection for permanent and collective safety for roof openings
- tested and approved in accordance with GS-BAU-18 and is used against fall-through
- quick installation without roof penetration
- connection technology can assess the substrate's bearing capacity
- designed for the individual need in existing structures because of the high independence level concerning manufacturer and nominal size of the dome rooflight upstand
- a special version for ventable round dome rooflights is available in diameters of 80, 90, 100, 120, 150, 180, 200 and 220 cm
- a special version for fixed round dome rooflights is available in diameters of 80, 90, 100, 120, 150, 180, 200, 220, 240, 250 and 270 cm

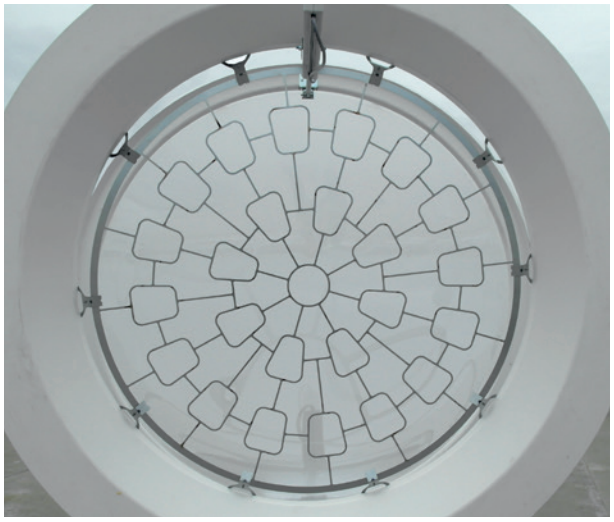

JET LK-DDS ROUND, installed on a GRP upstand with dome rooflight, ventable

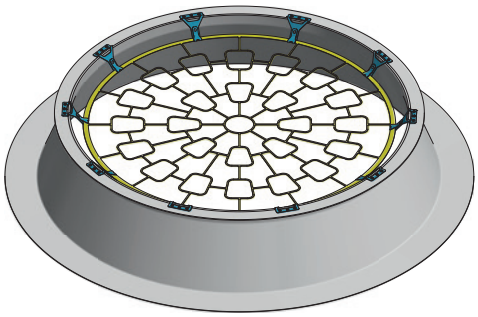

JET LK-DDS ROUND for fixed dome rooflights

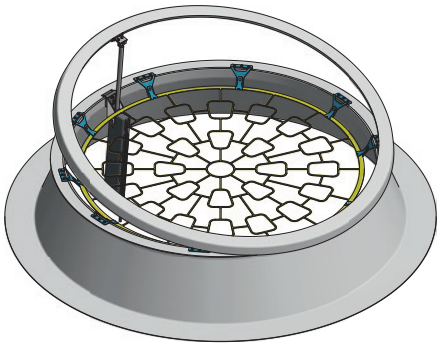

JET LK-DDS ROUND for dome rooflights solo ventable

Five steps to the best fall-through protection

01

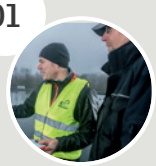

Step 1: Hazard assessment

02

Step 2: Bearing capacity assessment

03

Step 3: Installation/ retrofitting

04

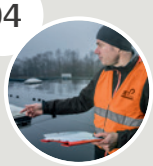

Step 4: Technical inspection

05

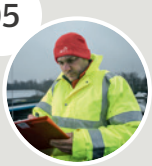

Step 5: Documentation

Valid from date of publication until new edition. Version: January 2021. Not responsible for printing errors, mistakes and technical alterations.